Functional Diagram

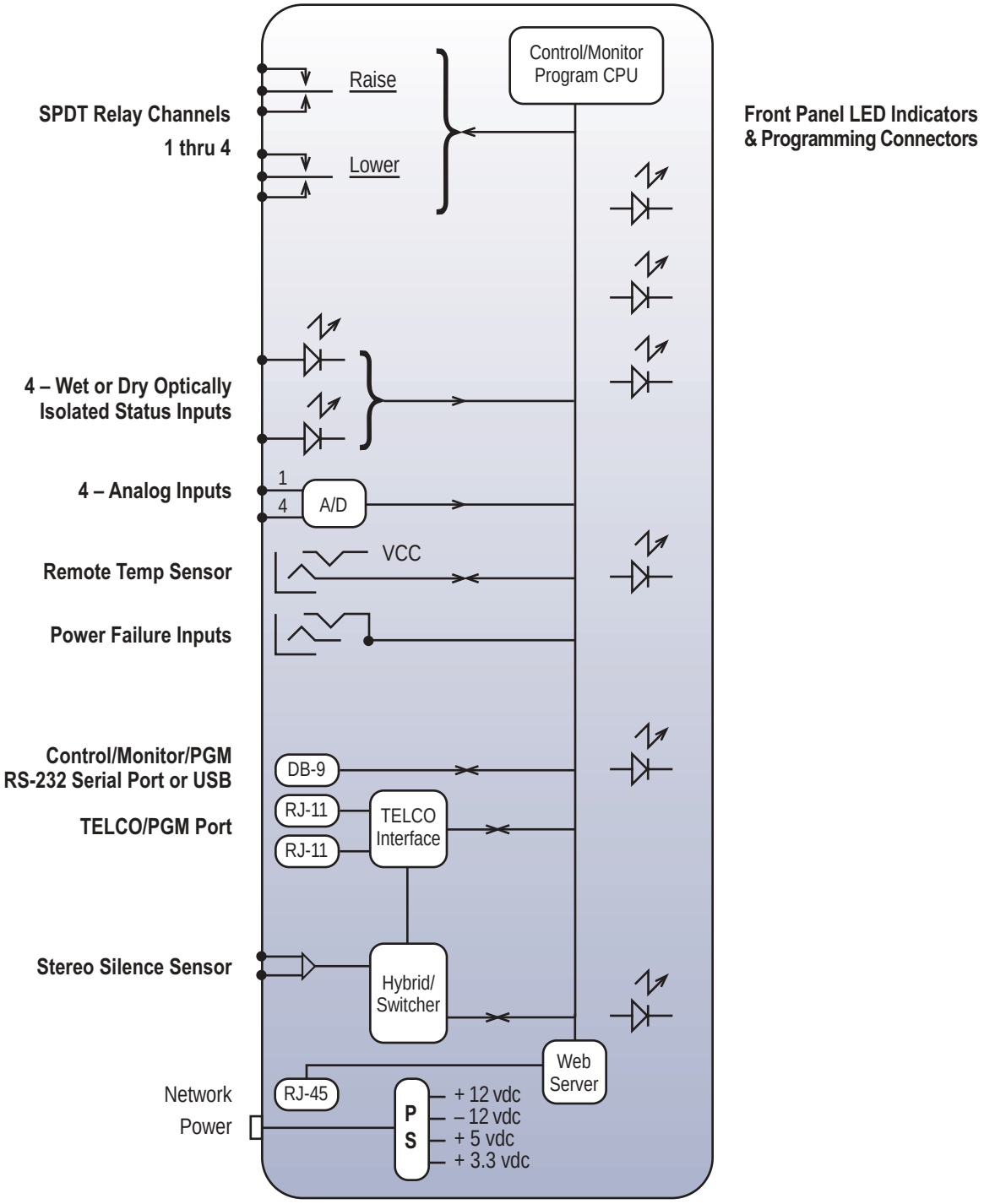

131 State Street, Sedro-Woolley, WA 98284 • 360.854.9559 • Fax 360.854.9479
Visit us online at www.broadcasttools.com
Copyright © 1989-2007 by Broadcast Tools, Inc. All Rights Reserved.
Modification Date: 05/07/07